Selecting the Element Type and Defining the Element Parameters

Click on the link to the linear element type that you need more information about.

Line Elements
Beam Elements
Gap Elements
Rigid Elements
Spring Elements
Truss Elements

Planar Elements
2-D Elements
Membrane Elements
Plate Elements
Thick Composite Elements
Thin Composite Elements

Solid Elements
Brick Elements
Tetrahedral Elements

Combining Element Types
Incompatible Displacement Modes

Beam Elements

What is a Beam Element?

A beam element is a slender structural member that offers resistance to forces and bending under applied loads. A beam element differs from a truss element in that a beam resists moments (twisting and bending) at the connections.

These three node elements are formulated in three-dimensional space. The first two nodes (I-node and J-node) are specified by the element geometry. The third node (K-node) is used to orient each beam element in 3-D space (see Figure 1). A maximum of three translational degrees-of-freedom and three rotational degrees-of-freedom are defined for beam elements (see Figure 2). Three orthogonal forces (one axial and two shear) and three orthogonal moments (one torsion and two bending) are calculated at each end of each element. Optionally, the maximum normal stresses produced by combined axial and bending loads are calculated. Uniform inertia loads in three directions, fixed-end forces, and intermediate loads are the basic element based loadings.

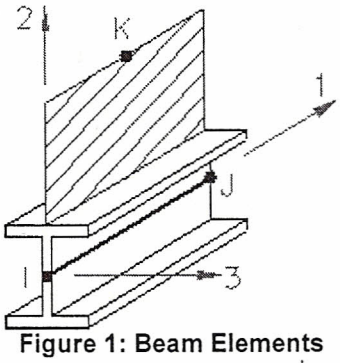

Figure 1: Beam Elements

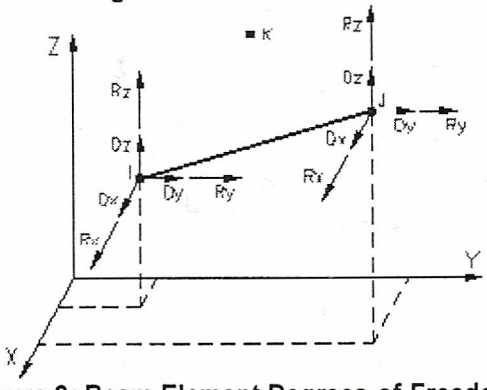

Figure 2: Beam Element Degrees-of-Freedom

When to Use Beam Elements

The basic guidelines for when to use a beam element are:

- The length of the element is much greater than the width or depth.
- The element has constant cross-sectional properties.
- The element must be able to transfer moments.
- The element must be able to handle a load distributed across its length.

Part, Layer and Surface Properties for Beam Elements

Beam Element Orientation

Specifying the Cross-Sectional Properties of Beam Elements

The **"Sectional Properties"** table in the **"Cross-Section"** tab of the **"Element Definition"** dialog is used to define the cross-sectional properties for each layer in the beam element part. A separate row will appear in the table for each layer in the part. The sectional property columns are:

A Specify the axial area in this column. The axial area is the cross-sectional area of the beam resisting axial force. This area must be greater than 0.0.

J1 Specify the torsional resistance in this column. The torsional resistance is the area moment of inertia resisting the torsional moment M1. For most cross-sections, the torsional resistance is much less than the polar moment of inertia. The torsional resistance must be greater than 0.0.

I2 Specify the flexural moment of inertia about the local 2 axis in this column. The flexural moment of inertia is the area moment of inertia resisting the bending moment M2. The flexural moment of inertia

must be greater than 0.0.
I3 Specify the flexural moment of inertia about the local 3 axis in this column. The flexural moment of inertia is the area moment of inertia resisting the bending moment M3. The flexural moment of inertia must be greater than 0.0.
S2 Specify the section modulus about the local 2 axis in this column. This value is not required but is necessary for the bending stress calculation M2/S2. If this value is 0.0, the bending stress about the local 2 axis will be set to 0.
S3 Specify the section modulus about the local 3 axis in this column. This value is not required but is necessary for the bending stress calculation M3/S3. If this value is 0.0, the bending stress about the local 3axis will be set to 0.
Sa2 Specify the shear area parallel to the local 2 axis. The shear area is the effective beam cross-sectional area resisting the shear force R2. If the shear area is 0.0, the shear deflection in the local 2 direction is ignored (usually a safe assumption). The shear area correction is only needed if the beam width is comparable to the beam length.
Sa3 Specify the shear area parallel to the local 3 axis. The shear area is the effective beam cross-sectional area resisting the shear force R3. If the shear area is 0.0, the shear deflection in the local 3 direction is ignored (usually a safe assumption). The shear area correction is only needed if the beam width is comparable to the beam length.

If you know the dimensions of the cross-section instead of the properties, you can use the cross-section libraries to determine the necessary values.

Using the Cross-Section Libraries

In order to use the cross-section libraries, you must first select the layer for which you want to define the cross-sectional properties. After the layer is selected, press the **"Cross-Section Libraries..."** button.

How to Select a Cross Section from an Existing Library
How to Create a New Library
How to Add a Cross Section to a Library
How to Define the Dimensions of a Common Cross-Section
Other Beam Element Parameters
Basic Steps for Using Beam Elements

Truss Elements

What is a Truss Element?

Truss elements are two-node members which allow arbitrary orientation in the XYZ coordinate system. The truss transmits axial force only and, in general, is a three degree-of-freedom (DOF) element (i.e., three global translation components at each end of the member). Trusses are used to model structures such as towers, bridges and buildings.

The three-dimensional (3-D) truss element is assumed to have a constant cross-sectional area and can be used in linear elastic analysis. Linear elastic material behavior is defined only by the modulus of elasticity. Linear trusses can also be used to simulate translational and displacement boundary elements.

Trusses, by definition, cannot have rotational DOFs, even if you released these DOFs when you applied the boundary conditions. You can apply translational DOFs as needed.

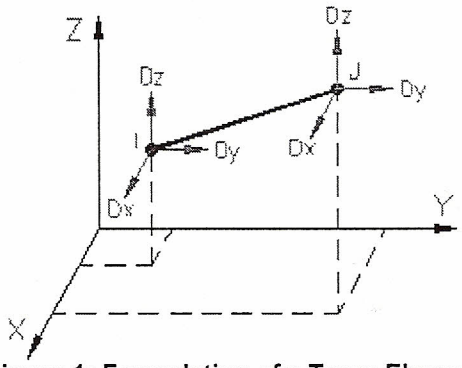

Figure 1: Formulation of a Truss Element

When to Use Truss Elements

The basic guidelines for when to use a truss element are:

- The length of the element is much greater than the width or depth (approx 8-10 times).
- It is connected to the rest of the model with hinges that do not transfer moments.
- The external applied forces are only at joints.

Truss Element Parameters

When using spring elements, specify the axial cross-sectional area of the truss elements in this part in the **"Cross-Sectional Area"** field in the **"Element Definition"** dialog. This value must be greater than zero and is required for an analysis.

If you are performing a thermal stress analysis on this part, specify the temperature at which the elements in this part will experience no thermally induced stresses in the **"Stress Free Reference Temperature"** field. Element based loads associated with constraint of thermal growth are calculated using the average of the temperatures specified on the nodal point data lines. The reference temperature is used to calculate the temperature change. Thermal loading may be used to achieve other types of member loadings. For these cases, an equivalent temperature change (dT) is used.

Basic Steps for Using Truss Elements

- Be sure that a unit system is defined.
- Be sure that the model is using a structural analysis type.
- Right click on the **"Element Type"** heading for the part that you want to be truss elements.
- Select the **"Truss"** command.
- Right click on the **"Element Definition"** heading for the part that you want to be truss elements.
- Select the **"Modify Element Definition..."** command.
- In the **"Element Definition"** dialog, type a value in the **"Cross Sectional Area"** field.
- If you are running a thermal stress analysis, type a value in the **"Stress Free Reference Temperature"** field. This is the temperature at which no stresses are present in the model. The difference between this temperature and the nodal temperatures will create the stress.
- Press the **"OK"** button.

Using Truss Elements to Model an Initial Lack of Fit

The following equations may be used to calculate the equivalent temperature change associated with an initial lack of fit of a truss member between two points. A positive value would mean that the element is initially too short.

$$\Delta T = \frac{D}{\alpha L}$$

where:

$$\Delta T = T_{avg} - T_{sf}$$

where:

T_{avg} = the average of the nodal temperatures of the two nodes of the truss element.

T_{sf} - the stress free reference temperature of the part.

D = the desired elongation or shrinkage of the truss element.

α = the thermal coefficient of expansion of the part.

L = the unloaded length of the truss element.

Using Truss Elements to Model an Initial Prestress

The following equations may be used to calculate the equivalent temperature change associated with an initial prestress used to deform a truss member to fit between two points:

$$\Delta T = \frac{P}{EA\alpha}$$

where:

$$\Delta T = T_{avg} - T_{sf}$$

where:

T_{avg} = the average of the nodal temperatures of the two nodes of the truss element.

T_{sf} - the stress free reference temperature of the part.

P = the axial force in the truss element.

E = the modulus of elasticity of the truss element.

A = the cross-sectional area of the truss element.

α = the thermal coefficient of expansion of the part.

Gap Elements

What is a Gap Element?
Gap elements are two-node elements formulated in three-dimensional space. This element type is only available in a static stress analysis with linear material models.

Gap elements are defined by two end nodes specified in three-dimensional space. Only the element's axial forces are calculated for each element. No element-based loading is defined for gap elements.

In general, there are three applications for gap elements. Each has its own characteristics in terms of element input. They are briefly summarized as follows:

Application Type	Element Direction	Input Element Stiffness
Rigid support at the structure boundary to calculate the support reactions	Element must be aligned with global X, Y or Z axis	3 or 4 orders of magnitude larger than the other normal stiffnesses in the structure
Interface element between two faces of the structure in space	Element may be defined in any direction	Same order of magnitude of the other normal stiffnesses in the structure
Elastic spring between the base of the structure and the foundation	Element may be defined in any direction	Actual spring constant calculated from the foundation soil

Excessively stiff gap elements (i.e., with very large spring stiffness) that are not aligned with the global coordinate system should be avoided. Such elements introduce large off-diagonal values into the structural stiffness matrix and cause solution difficulties. The resulting solution may also be inaccurate. The provided spring stiffness -- about 3 or 4 orders of magnitude larger than the other normal stiffnesses in the structure -- is usually sufficient for rigid gap elements used in application type (1).

Types of Gap Elements
There are four types of gap elements:

Description	Gap Space
Compression Gap	Distance between two endpoints
Tension Gap	Distance between two endpoints
Compression Gap	Zero gap
Tension Gap	Zero gap

A compression gap is not activated until the gap is closed; a tension gap is not activated until the gap is open. Therefore, the structural behavior of a finite element model associated with gap elements is always nonlinear because of its indeterminate boundary condition, i.e., whether the gaps are closed or opened is not known in advance.

When to Use Gap Elements
The basic guidelines for when to use a gap element are:

- You wish to model the effects of a spring or cable where the stiffness is not always present under all loadings.
- You wish to know the contact force between two parts under a load.

Performing Analyses with Gap Elements
In this analysis, the materials of the structures used in the finite element model are assumed to be linearly elastic and to have small deformation. The geometric stiffness, nonlinear strain of the element and the friction force between two surfaces due to sliding are not considered. Therefore, the loading and unloading do not dissipate the energy. The stress and strain of the structure are completely defined by the final deformed geometry which is independent of the loading history.
The nonlinear structural analysis with gap elements is linearized into many piecewise linear calculation steps. At the beginning of each load increment, it is assumed that there is no additional closing or opening gap. Then during the loading process, when any gaps are closed (compression gap) or opened (tension gap) over the specified gap space, the structural global stiffness is reformulated to include the stiffness from the gap element and the load vector is scaled down to the value that just makes the gap close or open precisely. The deformations of the structure are updated for each load increment. This process continues until the full loading is completely applied.

Some other restrictions:

- Gap elements are **not** available for dynamic analysis.
- Only one load case is allowed in a static analysis.

Gap elements in a linear stress analysis force the solution to become an iterative solution. Until the deflections are known, it is unknown which gap elements are in contact. Until it is known which gap elements are in contact, the deflections cannot be calculated. Thus, the solution method is as follows:

- assume that no gap elements are in contact on the first iteration
- calculate the deflection
- determine which gap element would have come into contact first
- add that element to the solution
- repeat the analysis until that status of all elements is constant

The important thing to keep in mind is that the gap elements do not contribute to the solution on the first iteration. Thus, all parts of the model must be statically stable without relying on the gap elements. In cases where parts are free to move until they interact with other parts, these free parts must be restrained with weak springs (weak boundary elements). The goal is to provide stability to all parts, but allow them to move a considerable distance in the process. After the first iteration, the processor detects that some gap elements have come into contact, and then proceeds with the next iteration and includes the gap element.

Gap Element Parameters

When using gap elements, first you must select the type of gap element to use for the part in the **"Type"** drop-down box in the **"Element Definition"** dialog. The next step is to define the stiffness of the gap elements in the "Stiffness" field.

Basic Steps for Using Gap Elements

Spring Elements

What is a Spring Element?

A spring element in FEMPRO has two basic forms. The first is the classic spring. This spring connects two nodes on the model. This spring can be axial or rotational. For an axial spring, a spring stiffness, k, is applied to the spring element. The spring will deflect a distance x. This distance will depend on the axial force in the spring element, F, and the spring stiffness. The distance the spring deflects can be calculated by the equation x=F/k. For a rotational spring, a torsional stiffness, k_t, is applied to the spring element. The spring will rotate through an angle θ. This angle will depend on the moment applied to the spring, M, and the torsional stiffness. The angle through which the spring rotates can be calculated by the equation M/k_t.

The second form of the spring element is a DOF spring. This spring will connect a single DOF from each node to which it is connected. This spring will have a stiffness value as described for the classic spring.

When to Use Spring Elements

The basic guidelines for when to use a spring element are:

- Two parts are connected by a spring with a known spring stiffness value.
- Two parts are connected by a part that will only transmit an axial force. The spring stiffness for this part can be calculated as AE/L where A is the cross-sectional area, E is the modulus of elasticity and L is the length.

Spring Element Parameters

When using spring elements, first select the type of spring for the part in the **"Spring Type"** section in the **"General"** tab of the **"Element Definition"** dialog. For most applications, the **"Spring"** type is appropriate. If you want to transfer the loads from different degrees-of-freedom at each node, select the **"DOF Spring"** type. Next, specify the spring stiffness in the **"Stiffness"** field.

If you selected the **"Spring"** radio button, specify if you want the spring to resist translation or rotation in the **"Element Type"** section. If you selected the **"DOF Spring"** radio button, specify the degree-of-freedom to which you want to stiffness applied at the I-node and J-node in the **"I Node"** and **"J Node"** sections.

Visualizing Spring Elements in the Results Environment

Spring elements can appear in the Results environment either as a line or as an actual spring. If you want the spring to be rendered, you must activate the **"Visualize as spring"** checkbox in the **"Visualization"** tab of the **"Element Definition"** dialog. You can then specify the dimensions of the spring. If the sum of the values in the **"Beginning Length"** field, the **"End Length"** field and the product of the **"Number of Coils"** and the **"Wire Diameter"** fields is greater than the length of the spring element, the spring will not be drawn in the Results environment. The value in the **"Coil diameter"** field refers to the diameter of the spring along the centerline of the wire. The **"Beginning Length"** field and the **"Begin attachment type"** drop-down box refer to the end of the spring element with the lower node number. The **"End Length"** field and the **"End attachment type"** drop-down box refer to the end of the spring element with the higher node number.

If you specify attachments at either end of the spring, you must define an orientation point. The coordinate entered in the **"X"**, **"Y"** and **"Z"** fields will be used to assign the plane in which the attachment is located. A vector will be created perpendicular to the spring element passing through this point. The attachment will lie in the plane that is perpendicular to this vector. If this coordinate is along the line of the element, the spring will not be drawn in the Results environment.

Basic Steps for Using Spring Elements

- Be sure that a unit system is defined.
- Be sure that the model is using a structural analysis type.
- Right click on the **"Element Type"** heading for the part that you want to be spring elements.
- Select the **"Spring"** command.
- Right click on the **"Element Definition"** heading..
- Select the **"Modify Element Definition..."** command.
- Select the type of spring in the **"Spring Type"** section.
- If the **"Spring"** radio button is selected in the **"Spring Type"** section, specify if this spring will be axial or rotational in the **"Element Type"** section.
- If the **"DOF Spring"** radio button is selected in the **"Spring Type"** section, select the DOF for the i node and j node in the **"I Node"** and **"J Node"** sections.
- Specify the stiffness of the spring in the **"Spring stiffness"** field.
- Go to the **"Visualization"** tab.

- Activate the **"Visualize as spring"** checkbox.
- Define the dimensions of the spring.
- Press the **"OK"** button.

Rigid Elements

What is a Rigid Element?
A rigid element in FEMPRO is used to rigidly connect two nodes of a model. The rigid element consists of two nodes. One of these nodes can be unconnected to the model and constrained. The rigid element will be assigned a single stiffness value that will be applied against one or multiple degrees of freedom. Rigid elements can be used to connect parts together or simulate an boundary that is not modeled.
When to Use Rigid Elements
The basic guidelines for when to use a rigid element are:

- Two parts are connected together by a rigid connection.
- If you want to model the effect of a part that will serve as a constraint in the model without modeling the entire part.

Rigid Element Parameters
When using rigid elements, first define the stiffness of the rigid elements in the **"Stiffness"** field of the **"Element Definition"** dialog. The deflection or rotation of the element will be calculated by dividing the internal force or moment by this value. Second, specify the degrees-of-freedom against which you want the stiffness to be applied in the **"Component DOF"** section by activating the appropriate checkboxes.
Basic Steps for Using Rigid Elements

- Be sure that a unit system is defined.
- Be sure that the model is using a structural analysis type.
- Right click on the **"Element Type"** heading for the part that you want to be rigid elements.
- Select the **"Rigid"** command.
- Right click on the **"Element Definition"** heading.
- Select the **"Modify Element Definition..."** command.
- Specify the spring stiffness of the rigid element in the **"Stiffness"** field.
- Activate the checkboxes for the degrees of freedom against which this rigid element will be active in the **"Component DOF"** section.
- Press the **"OK"** button.

2-D Elements

What is a 2-D Element?
2-D elements are three- or four-node elements that must be formulated in the YZ plane. They are used to model and analyze objects such as bearings or seals, or structures such as dams. These elements are formulated in the YZ plane and have only two degrees-of-freedom defined: the Y translation and the Z translation. Temperature dependent orthotropic material properties can be defined and incompatible displacement modes can be included.

The highest surface number among the lines that define the element determines the surface number of that element.

2-D elements, by definition, cannot have rotational degrees of freedom (DOFs) or translation in the X direction. You can apply translational Y and Z constraints and forces as needed.

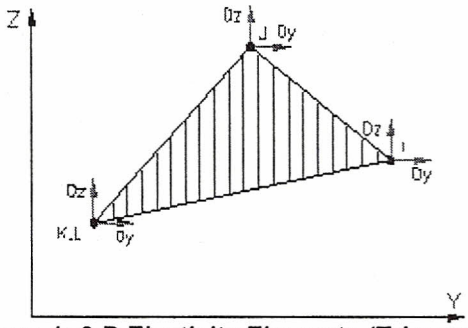

Figure 1: 2-D Elasticity Elements (Triangular)

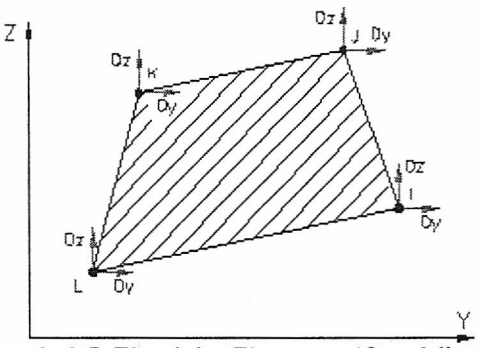

Figure 2: 2-D Elasticity Elements (Quadrilateral)

When to Use 2-D Elements
The basic guidelines for when to use a 2-D element are:

- You wish to model a cross section of a part.
- Model can be drawn in the YZ plane.
- Plane stress geometry type: No stress in the X direction (through the thickness). Strain in the X direction is allowable (e.g. thin plate under an axial load).
- Plane strain geometry type: No strain in the X direction (through the thickness). Stress in the X direction is allowable (e.g. large dam).
- Axisymmetric geometry type: Model is axisymmetric about the Z axis and exists only in the positive Y quadrant of the YZ plane.

Selecting the Type of 2-D Elements
There are three types of 2-D elements available for a structural analysis. These can be selected in the **"Geometry Type"** drop-down box in the **"General"** tab of the **"Element Definition"** dialog.

- **Axisymmetric:** Select this geometry type for elements that model solids with geometric, load and boundary condition symmetry about the Z axis. Negative Y coordinates are not admissible. If a node lies along the axis of revolution (the Z axis) the translation in the Y direction must be constrained. Nodal loads are normalized by the number of radians in a circle (load divided by radians).

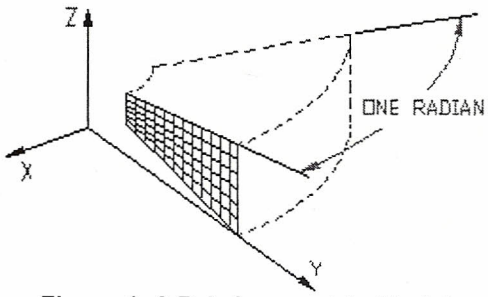

Figure 1: 2-D Axisymmetric Model

- **Plane Strain:** Select this geometry type to model solids which exhibit no deflection normal to the YZ plane. Since no deflection in the X direction is assumed, a thickness of 1 unit is assumed.

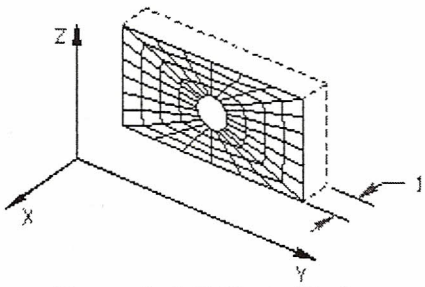

Figure 2: 2-D Plane Strain

- **Plane Stress:** Select this geometry type to model solids of a specified thickness normal to the YZ plane which exhibit no stress normal to the YZ plane. The constitutive relations are modified to make the stress normal to the YZ plane zero.

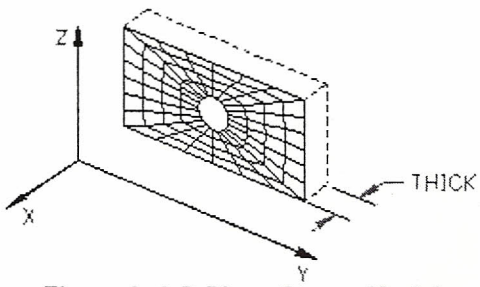

Figure 3: 2-D Plane Stress Model

2-D Element Parameters

When using 2-D elements, if you are using the plane stress geometry type, you must define the thickness of the part in the **"Thickness"** field of the **"Element Definition"** dialog.

Next you must specify the material model for this part in the **"Material Model"** drop-down box. If the material properties in all directions are identical, select the **"Isotropic"** option. If the material properties vary along three orthogonal axes or if properties change with temperature, select the **"Orthotropic"** option.

When the orthotropic material model is used for 2-D elements, three material axes are defined. these are the n, s and t axes. By default, the n axis will be parallel to the global Y axis. The s axis will be 90 degrees counterclockwise from the n axis. The t axis will be calculated from the cross product of the n and s axes. If the orthotropic material axes are not aligned with the global axes, you can specify an angle in the **"Material Axis Rotation Angle"** field. The n axis will be measured this angle counterclockwise from the Y axis.

If you are performing a thermal stress analysis on this part, specify the temperature at which the elements in this part will experience no thermally induced stresses in the **"Stress Free Reference Temperature"** field. Element based loads associated with constraint of thermal growth are calculated using the average of the temperatures specified on the nodal point data lines. The reference temperature is used to calculate the temperature change. Thermal loading may be used to achieve other types of member loadings. For these cases, an equivalent temperature change (dT) is used.

The last parameter that can be defined is the compatibility. This is done in the **"Compatibility"** drop-down box. If the **"Not Enforced"** option is selected, gaps or overlaps will be allowed along inter-element boundaries. These elements are formulated using an assumed linear stress field. These elements are most effective as low aspect ratio rectangles. If the **"Enforced"** option is selected, overlaps or discontinuities will not be allowed along inter-element boundaries. These elements are formulated using an assumed linear displacement field. These elements can overestimate the stiffness of the structure. In general, a greater mesh density in the direction of the strain gradient is required to achieve the same level of accuracy as elements for which the **"Not Enforced"** option is selected. See Incompatible Displacement Modes for more information.

Controlling the Orientation of 2-D Elements

Basic Steps for Using 2-D Elements

Plate Elements

What is a Plate Element?
Plate elements are three- or four-node elements formulated in three-dimensional space. These elements are used to model and analyze objects such as pressure vessels, or structures such as automobile body parts.

The highest surface number among the lines that define an element determines the surface number of that element.

The out-of-plane rotational DOF is not considered for plate elements. You can apply the other rotational DOFs and all of the translational DOFs as needed.

Nodal forces, nodal moments (except when about an axis normal to the element face), pressures (normal to the element face), acceleration/gravity, centrifugal and thermal loads are supported.
When to Use Plate Elements
The basic guidelines for when to use a plate element are:

- The thickness is small with relation to the length and width (approximately. 1/10).
- Small displacements and rotations.
- Elements remain planar, no warpage.
- Stress distribution through the thickness is linear.
- No rotation about the direction normal to the element.

Plate Element Parameters
When using plate elements, you must define the thickness of the part in the **"Thickness"** field of the **"Element Definition"** dialog. The element is considered to be drawn at the midplane of the plate element. Therefore, half of the entered value for thickness will be considered on top of the element while the other half will below the midplane. You must enter a value for the thickness to run the analysis. If the plate elements were generated from a midplane mesh in the CAD Solid Model environment, a thickness will already be defined. The average thickness from each surface of the model will be calculated and used during the analysis. If you want to assign a constant thickness for the entire part, activate the **"Apply constant thickness"** checkbox and type the desired value in the **"Thickness"** field.

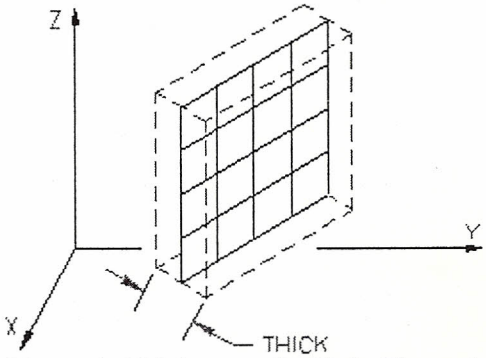

Figure 1: Thickness of a Plate Element

Next you must specify the material model for this part in the **"Material Model"** drop-down box. If the material properties in all directions are identical, select the **"Isotropic"** option. If the material properties vary along three orthogonal axes or if properties change with temperature, select the **"Orthotropic"** option.

Next you can specify what type of element formulation will be used for this part in the **"Element Formulation"** drop-down box. The **"Veubeke"** option uses the theory by B. Fraeijs de Veubeke for plate formulation for displaced and equilibrium models. This option is recommended for plate elements that have little or no warpage. The **"Reduced Shear"** option uses the constant linear strain triangle (CLST) with reduced shear integration and Hsieh, Clough and Tocher (HCT) plate bending element theories. This option is recommended for plate elements that contain significant warpage. The **"Linear Strain"** option uses the CLST without reduced shear integration and HCT plate bending element theories. The **"Constant Strain"** option uses the constant strain triangle (CST) and HCT plate bending element theories.

There are three options for performing a thermal stress analysis with plate elements. These are selected in the **"Temperature Method"** drop-down box. If the **"Stress Free"** option is selected, the axial thermal stress will be calculated as the product of the difference of the nodal temperatures and the **"Stress Free Reference Temperature"** and the thermal coefficient of expansion. If the "Normal" option is selected, the axial thermal

stress will be calculated as the product of the **"Mean Temperature Difference"** and the thermal coefficient of expansion. If the **"Nodal dt"** option is selected, the axial thermal stress will be calculated as the product of the difference of the nodal temperatures and 0 and the thermal coefficient of expansion. Regardless of the method selected, you can also specify the temperature gradient in local 3 direction in the **"delta T thru thickness"** field. For plate elements, this is the mean temperature gradient across the thickness and is equal to the change in temperature across the plate divided by its thickness. If the element normal point is placed on the cooler side of the plate, then this value is positive.

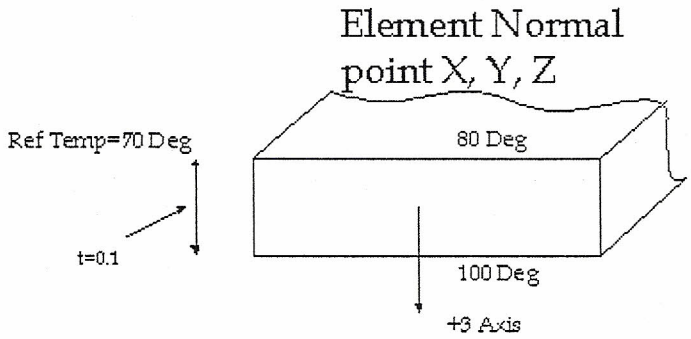

Figure 2: Temperature Gradient Through a Plate Element

Controlling the Orientation of Plate Elements
Basic Steps for Using Plate Elements

Membrane Elements

What is a Membrane Element?

Membrane elements are three- or four-node elements formulated in three-dimensional space. Membrane elements are used to model fabric-like objects such as tents or cots, or structures such as the roof of a sports stadium, in which the elements will not support or transmit a moment load.

Membrane elements model solids of a specified thickness which exhibit no stress normal to the thickness. The constitutive relations are modified to make the stress normal to the thickness zero. The highest surface number among the lines that define the element determines the surface number of that element.

Membrane elements, by definition, cannot have rotational degrees of freedom (DOFs), even if you released these DOFs when you apply the boundary conditions. You can apply translational DOFs as needed. However, only in-plane stiffnesses are formulated. Very small out-of-plane stiffnesses will be applied to provide stability. Consequently, only in-plane (membrane) loads are admissible. Temperature dependent, anisotropic material properties can be defined and incompatible displacement modes can be included. Stress output is provided at the nodes.

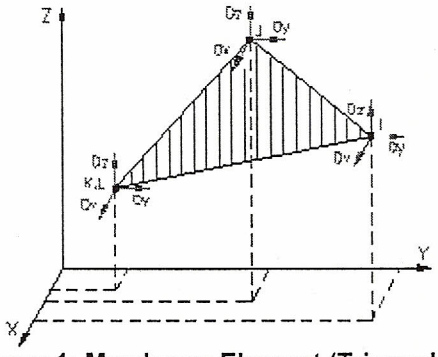

Figure 1: Membrane Element (Triangular)

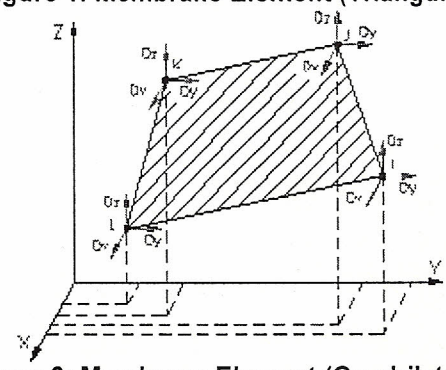

Figure 2: Membrane Element (Quadrilateral)

When to Use Membrane Elements

The basic guidelines for when to use a membrane element are:

- The thickness of the element is very small relative to the length or width.
- The element will have no stress in the direction normal to the thickness.
- The element does not carry or transmit any moments.

Membrane Element Parameters

When using membrane elements, you must define the thickness of the part in the **"Thickness"** field of the **"Element Definition"** dialog. The element is considered to be drawn at the midplane of the membrane element. Therefore, half of the entered value for thickness will be considered on top of the element while the other half will below the midplane. You must enter a value for the thickness to run the analysis.

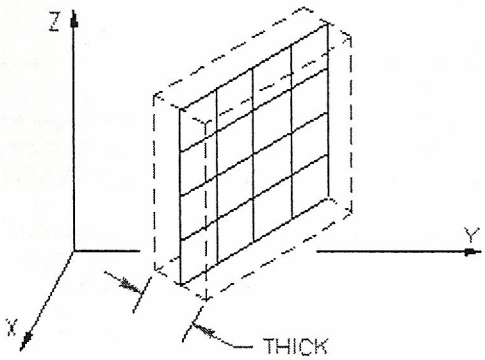

Figure 1: Thickness of a Membrane Element

Next you must specify the material model for this part in the **"Material Model"** drop-down box. If the material properties in all directions are identical, select the **"Isotropic"** option. If the material properties vary along three orthogonal axes or if properties change with temperature, select the **"Orthotropic"** option.

When the orthotropic material model is used for membrane elements, three material axes are defined. these are the n, s and t axes. By default, the n axis will be parallel to the global Y axis. The s axis will be 90 degrees counterclockwise from the n axis. The t axis will be calculated from the cross product of the n and s axes. If the orthotropic material axes are not aligned with the global axes, you can specify an angle in the **"Material Axis Rotation Angle"** field. The n axis will be measured this angle counterclockwise from the Y axis.

If you are performing a thermal stress analysis on this part, specify the temperature at which the elements in this part will experience no thermally induced stresses in the **"Stress Free Reference Temperature"** field. Element based loads associated with constraint of thermal growth are calculated using the average of the temperatures specified on the nodal point data lines. The reference temperature is used to calculate the temperature change. Thermal loading may be used to achieve other types of member loadings. For these cases, an equivalent temperature change (dT) is used.

The last parameter that can be defined is the compatibility. This is done in the **"Compatibility"** drop-down box. If the **"Not Enforced"** option is selected, gaps or overlaps will be allowed along inter-element boundaries. These elements are formulated using an assumed linear stress field. These elements are most effective as low aspect ratio rectangles. If the **"Enforced"** option is selected, overlaps or discontinuities will not be allowed along inter-element boundaries. These elements are formulated using an assumed linear displacement field. These elements can overestimate the stiffness of the structure. In general, a greater mesh density in the direction of the strain gradient is required to achieve the same level of accuracy as elements for which the **"Not Enforced"** option is selected. See Incompatible Displacement Modes for more information.

Controlling the Orientation of Membrane Elements
Basic Steps for Using Membrane Elements

Brick Elements

What is a Brick Element?
Brick elements are four-, five-, six- or eight-node elements formulated in three-dimensional space. Brick elements are used to model and analyze objects such as wheels, flanges, and turbine blades. Brick elements have the ability to incorporate midside nodes (producing 21-node elements) and several material models.

If the model originated from a CAD solid model, the surface number of a face will correspond to the surface of the CAD model coincident with that face regardless of the surface number of the lines. If the model contains joints, was solid meshed with all 8-node bricks, was modified by surface mesh enhancement or was taken to Superdraw III at any time, the surface number that is common in any three of the four lines that define a face (four-node region) or two of the three lines (three-node region) determines the surface number of that face.

Brick elements, by definition, cannot have rotational degrees of freedom (DOFs). You can apply translational DOFs as needed.

Several geometries of the brick element are available for structural analysis. These element versions have 4, 5, 6, 7 and 8 nodes available.

These 4- to 8-node elements are formulated in 3-D space, and have only three degrees-of-freedom defined per node: the X translation, the Y translation and the Z translation. Incompatible displacement modes are available only for 8-node elements. Pressure, thermal and inertial loads in three directions are the allowable element based loadings. You may also use centrifugal and nodal loads.

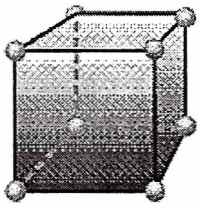

Figure 1: 3-D Brick Element, 8-node

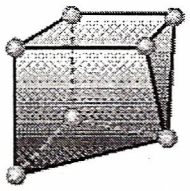

Figure 2: 3-D Brick Element, 7-node

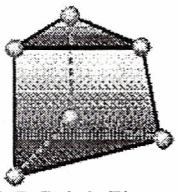

Figure 3: 3-D Brick Element, 6-node

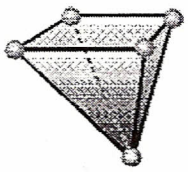

Figure 4: 3-D Brick Element, 5-node

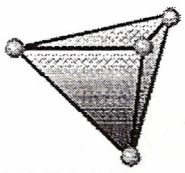

Figure 5: 3-D Brick Element, 4-node

The elements with less than 8 nodes are known as hybrid elements. They serve as transition elements between 8-node bricks and other elements such as tetrahedrons.

When to Use Brick Elements
The basic guidelines for when to use a brick element are:

- The stress results through the thickness of a part is desired.
- The model has only forces applied, no moments. (Bricks have no rotational degrees of freedom). For advice on how to apply a moment to a brick, see Combining Element Types.
- The model will have a hydrostatic pressure load applied.
- To capture bending in models with brick elements, three elements should be created through the thickness. If this can not be done for the model and is desired, the model may need to be evaluated using plate elements.

Brick Element Parameters
Controlling the Orientation of Brick Elements
Basic Steps for Using Brick Elements

Tetrahedral Elements

What is a Tetrahedral Element?
Linear tetrahedral elements are either constant stress elements with four nodes or linear stress elements with 10 nodes. These elements are formulated in three-dimensional space with three degrees of freedom per node; these are the translational degrees of freedom in the X, Y and Z directions, respectively. The ten-node element is an isoparametric element and stresses are calculated at the nodes. The following element-based loadings may be applied:

1. Uniform or hydrostatic pressure on the element faces.
2. Thermal gradients defined by temperatures at the nodes.
3. Uniform inertial load in three directions.

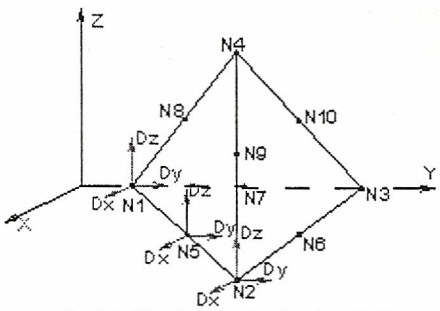

Figure 1: 10-Noded Tetrahedral Element

Determination Surface Number for Tetrahedrals

If the model originated from a CAD solid model, the surface number of a face will correspond to the surface of the CAD solid model coincident with that face regardless of the surface number of the lines. If the model contains joints, was modified by surface mesh enhancement or was taken to Superdraw III at any time, the surface number that is common in any three of the four lines that define a face (three-node region) determines the surface number of that face. The highest surface number among the four faces that define the tetrahedral element determines the surface number of the element.

Tetrahedral elements, by definition, cannot have rotational degrees of freedom (DOFs), even if you released these DOFs when applying the boundary conditions. You can apply translational DOFs as needed.

When to Use Tetrahedral Elements
The basic guidelines for when to use a tetrahedral element are:

- The stress results through the thickness of a part is desired.
- The model has only forces applied, no moments. (Tetrahedrals have no rotational degrees of freedom). For advice on how to apply a moment to a tetrahedral element, see Combining Element Types.
- The model will have a hydrostatic pressure or pressure load applied.

Tetrahedral Element Parameters
If you want the tetrahedral elements in this part to have the midside nodes activated, select the **"Included"** option in the **"Midside Nodes"** drop-down box. If this option is selected, the tetrahedral elements will have additional nodes defined at the midpoints of each edge. This will change a 4-node tetrahedral element into a 10-node tetrahedral element. An element with midside nodes will result in more accurately calculated gradients. This is especially useful when trying to model bending behavior with few elements across the bending plane. Elements with midside nodes increase processing time. If the mesh is sufficiently small, then midside nodes may not provide any significant increase in accuracy.

Next, select the integration order that will be used for the tetrahedral elements in this part in the **"Integration Order"** drop-down box. For rectangular shaped elements, select the **"2nd Order"** option. For moderately distorted elements, select the **"3rd Order"** option. For extremely distorted elements, select the **"4th Order"** option. The computation time for element stiffness formulation increases as the third power of the integration order. Consequently, the lowest integration order which produces acceptable results should be used to reduce processing time.

If you are performing a thermal stress analysis on this part, specify the temperature at which the elements in this part will experience no thermally induced stresses in the **"Stress Free Reference Temperature"** field.

Element based loads associated with constraint of thermal growth are calculated using the average of the temperatures specified on the nodal point data lines. The reference temperature is used to calculate the temperature change. Thermal loading may be used to achieve other types of member loadings. For these cases, an equivalent temperature change (dT) is used.

Basic Steps for Using Tetrahedral Elements

- Be sure that a unit system is defined.
- Be sure that the model is using a structural analysis type.
- Right click on the **"Element Type"** heading for the part that you want to be tetrahedral elements.
- Select the **"Tetrahedral"** command.
- Right click on the **"Element Definition"** heading.
- Select the **"Modify Element Definition..."** command.
- If you want to have midside nodes used in this part, select the **"Included"** option in the **"Midside Nodes"** drop-down box.
- If you are performing a thermal stress analysis, enter a temperature into the **"Stress Free Reference Temperature"** field. The difference between this value and the applied temperatures will be used to calculate the stress.

Incompatible Displacement Modes

ALGOR elements with incompatible displacement modes add additional degrees of freedom (DOF) to the element to improve the accuracy of the element. For example, an eight-node isoparametric brick element possesses 24 DOF (3 DOF/node) with linear accuracy. With incompatible displacement modes, three additional internal nodes are added to the element so the element possesses 33 DOF and has near quadratic accuracy. The internal nodes are condensed out of the element equations, so the final element matrices have 24 DOF but the element retains its near quadratic accuracy. The term incompatible displacement modes arises because the extra internal nodes added to each element are not shared between adjacent elements, thus the displacement fields of adjacent elements are not compatible. Elements with incompatible displacement modes are also referred to as non-conforming elements. To activate incompatible displacement modes, select the **"Enforced"** option in the **"Compatibility"** drop-down box in the **"Element Definition"** dialog.